03/01

Type OS2 Slam-Shut Device

Introduction

Scope of Manual

This instruction manual provides installation, maintenance, and parts information for the Type OS2 slam-shut device used on the Type EZROSX and the Type OSE.

Description

The purpose of the Type OSE/EZROSX slam-shut device is to totally and rapidly cut the flow of gas when the inlet and/or outlet pressure in the system either exceeds or drops below setpoints. The Type OS2 consists of a valve, mechanism box (BM1 or BM2) and either one or two modular sensing elements called manometric devices (BMS1 or BMS2) (see figure 2).

Type EZROSX (see figure 1) is a combination of the Type EZR regulator and the Type OS2 slam-shut device. For installation, maintenance, and parts information on the Type EZR portion, refer to Type EZR Instruction Manual Form 5468. All information for the Type OSE (which includes a Type OS2 slam-shut device and a Type E valve body) is contained in this instruction manual.

The detection of pressure variances is sensed by a double stage trip mechanism (see figure 7). The first stage is the detection stage and will only trip when the system pressure reaches the set pressure of the manometric sensing device. The second stage is the power stage and once tripped by the first stage, the closing spring causes the valve plug to slam-shut and remains closed until the valve is manually reset. If there are any inlet pressure variances or vibrations subjected to the second stage components, they are not transmitted to the first stage trip mechanism. This unique double-stage trip mechanism virtually eliminates nuisance tripping commonly found in other shutoff devices.

Incorporated in the Type OS2 valve plug is an automatic internal bypass valve mechanism, which bal-

continued on page 4

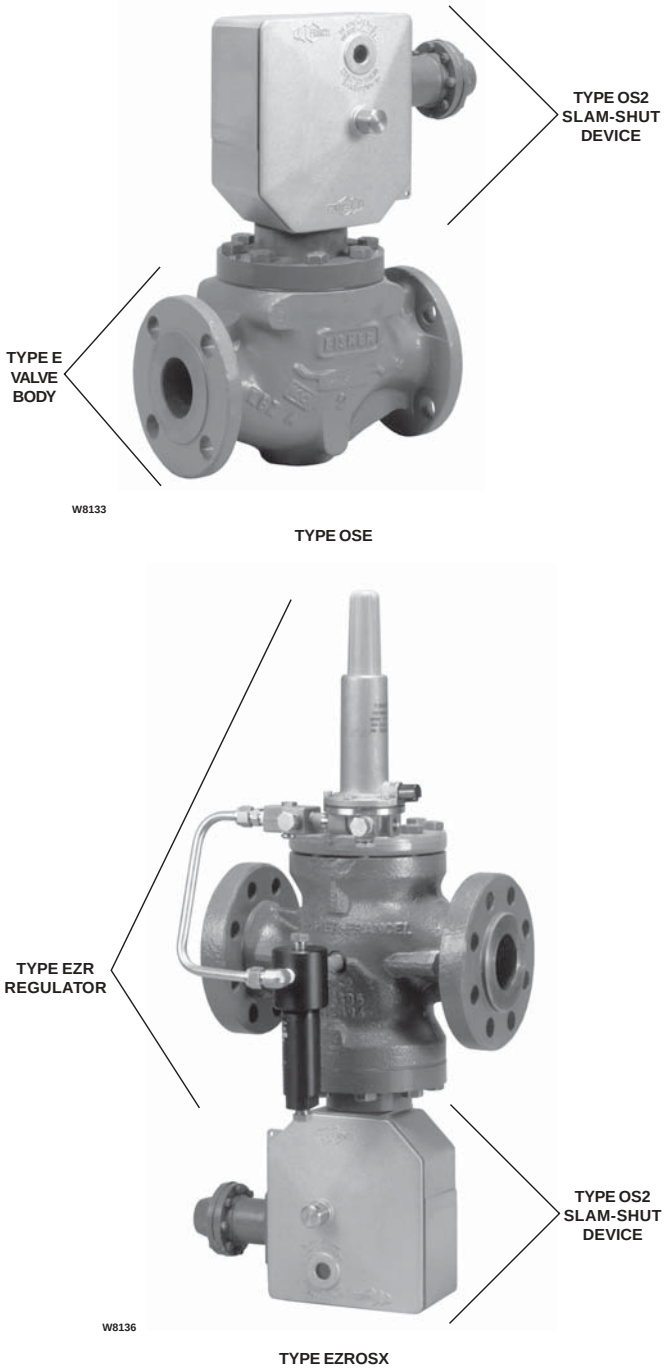

Figure 1. *Type OS2*

D102778X012

Specifications

Body Sizes and End Connection Styles

Type OSE

WCB Steel

1 and 2-inch (DN 25 and 50) NPT screwed; 1, 2, 3, 4, and 6-inch (DN 25, 50, 80, 100, and 150) ANSI Class 150 RF, 300 RF, or 600 RF

Cast Iron

1 and 2-inch (DN 25 and 50) NPT screwed; 1, 2, 3, 4, and 6-inch (DN 25, 50, 80, 100, and 150) ANSI Class 125 FF or 250 RF

Type EZROSX

WCB Steel

1, 2, 3, 4, and 6-inch (DN 25, 50, 80, 100, and 150) ANSI Class 150 RF, 300 RF, or 600 RF

Maximum Inlet Pressure(1)(2)

1470 psig (100 bar) or maximum body rating, whichever is lower.

Maximum Set Pressure

1470 psig (100 bar) or maximum body rating, whichever is lower.

Minimum Set Pressure

4.02-inches w.c. (10 mbar)

Outlet Pressure Ranges

See table 2

Maximum Temperature Capabilities(2)

–20° to 150°F (–29° to 65°C)

Maximum Flowing Pressure Differential

BODY SIZE, INCHES (DN)	MAXIMUM FLOWING PRESSURE DROPS, PSIG (bar)
1 (25)	360 (25)
2 (50)	360 (25)
3 (80)	360 (25)
4 (100)	150 (10)
6 (150)	85 (6)

Accuracy

+/-2.5% for set pressures at or below 1.45 psig (0,1 bar),
or +/-1% for set pressures above 1.45 psig (0,1 bar),
+/-5% for the piston Types 27 and 17.

Maximum Shutoff Pressure Differential

1470 psig (100 bar) or maximum body rating, whichever is lower.

Pressure Registration

External

Valve Plug Travel and Stem Diameter

BODY SIZE, INCHES (DN)	VALVE PLUG TRAVEL, INCHES (mm)	VALVE PLUG STEM DIAMETER, INCHES (mm)
1 (25)	1/2 (15)	0.138 (3,5)
2 (50)	1/2 (15)	
3 (80)	1-1/8 (30)	
4 (100)	2 (50)	
6 (150)	2 (50)	

Approximate Weight

BODY SIZE, INCHES (DN)	APPROXIMATE WEIGHT, POUNDS (kg)
1 (25)	36 (16)
2 (50)	70 (32)
3 (80)	121 (55)
4 (100)	216 (98)
6 (150)	445 (202)

Options

- Explosion-proof switch
- Non-explosion-proof limit switch
- Solenoid
- Additional manometric device for extra pressure sensing

1. Relief pressure plus maximum allowable buildup over setting.
2. The pressure/temperature limits in this instruction manual or any applicable standard limitation should not be exceeded.

Table 1. *Applications and Construction Guide (See Figure 2)*

APPLICATION	MECHANISM BOX REQUIRED		MANOMETRIC SENSING DEVICE REQUIRED	
	BM1	BM2	BMS1	BMS2
Overpressure Shutoff (OPSO)	Yes	No	Yes	No
Underpressure Shutoff (UPSO)	Yes	No	Yes	No
Overpressure Shutoff (OPSO) and Underpressure Shutoff (UPSO)	Yes	No	Yes(1)	No
Overpressure Shutoff (OPSO) and Underpressure Shutoff (UPSO)	No	Yes	Yes(2)	Yes
Overpressure Shutoff (OPSO), Overpressure Shutoff (OPSO) and Underpressure Shutoff (UPSO)	No	Yes	Yes(2)	Yes(1)

1. When using one manometric sensing device (BMS1 or BMS2) for both overpressure and underpressure shutoff, make sure that the difference between set pressures falls within the maximum range shown in table 2.
2. When using two manometric sensing devices (BMS1 and a BMS2), the BMS1 can only be used for high trip.

Table 2. *Spring Ranges, Part Numbers, and Maximum and Minimum Pressures for the Manometric Sensing Devices (BMS1 and BMS2)*

SPRING RANGE, PSIG (bar)		SPRING COLOR	SPRING PART NUMBER	MAXIMUM SENSING INLET PRESSURE, PSIG (bar)	MANOMETRIC SENSING DEVICE TYPE	MANOMETRIC SENSING DEVICE STYLE	SETPOINT TOLERANCE, PSIG (bar)(1)	MAXIMUM DIFFERENCE BETWEEN OVERPRESSURE AND UNDERPRESSURE(2)
4.02 to 14.1-inches w.c.	(10 to 35 mbar)	Purple	T14232T0012	75 (5)	162	Diaphragm	0.058 (0,004)	0.145 (0,010)
9.97 to 33.2-inches w.c.	(25 to 80 mbar)	Orange	T14233T0012				0.073 (0,005)	0.363 (0,025)
18-inches w.c. to 2.0 psig	(45 mbar to 0,140 bar)	Red	T14234T0012				0.145 (0,010)	0.725 (0,050)
1.0 to 3.5	(0,070 to 0,240)	Yellow	T14235T0012				0.203 (0,014)	0.870 (0,060)
1.7 to 5.6	(0,115 to 0,380)	Green	T14236T0012				0.261 (0,018)	2.18 (0,150)
2 to 11	(0,140 to 0,750)	Gray	T14238T0012				0.725 (0,050)	5.08 (0,350)
4 to 19	(0,250 to 1,3)	Brown	T14239T0012				1.16 (0,080)	8.70 (0,600)
7 to 33	(0,450 to 2,3)	Black	T14240T0012				2.47 (0,170)	16.0 (1,10)
15 to 75	(1,0 to 5,1)	Blue	T14237T0012	235 (16)	71		5.08 (0,350)	36.3 (2,50)
31 to 161	(2,1 to 11,0)	Brown	T14239T0012				10.2 (0,700)	79.8 (5,50)
59 to 235	(4,0 to 16,0)	Black	T14240T0012				23.2 (1,60)	145 (10,0)
235 to 323	(16,0 to 22,0)	Brown	T14239T0012	1470 (100)	27	Piston	43.5 (3,00)	Requires use of a BMS1 and a BMS2
323 to 588	(22,0 to 40,0)	Black	T14240T0012				94.3 (6,50)	
588 to 808	(40,0 to 55,0)	Brown	T14239T0012	1470 (100)	17		102 (7,00)	
808 to 1470	(55,0 to 100,0)	Black	T14240T0012				174 (12,0)	
81 to 323	(5,5 to 22,0)	Brown	T14239T0012	514 (35)	236	Bellows	14.5 (1,00)	145 (10,0)
122 to 514	(8,3 to 35,0)	Black	T14240T0012				36.3 (2,50)	290 (20,0)
257 to 1058	(17,5 to 72,0)	Gray	T14238T0012	1058 (72)	315		72.5 (5,00)	479 (33,0)

1. Minimum suggested difference between slam-shut set pressure and normal operating pressure of the system.
2. Maximum difference between overpressure and underpressure when using one manometric device (BMS1) with tripping hook (see figure 5). For underpressure and overpressure points greater than this maximum number, use a second manometric device (BMS2) for underpressure protection.

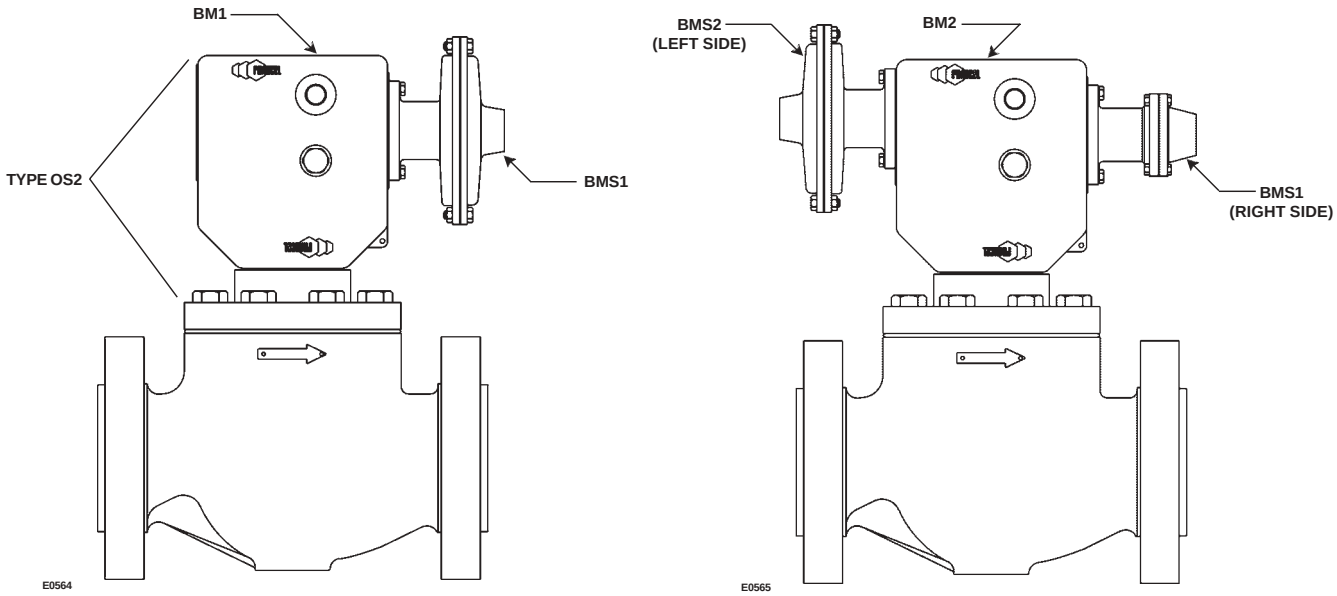

MECHANISM BOX (BM1) WITH 1 MANOMETRIC SENSING DEVICE (BMS1)

MECHANISM BOX (BM2) WITH 2 MANOMETRIC SENSING DEVICES (BMS1 AND BMS2)

TOP-MOUNTED (STAND-ALONE TYPE OSE VALVE)

Figure 2. *Types of Installation (Mounting on Horizontal Pipeline Only)*

ances pressures on both sides of the plug when resetting.

The Type OS2 Slam-Shut device can be used for all pressure ranges from 4.02-inches w.c. to 1470 psig (10 mbar to 100 bar) by simply replacing the sensing manometric device. In addition, the Type OS2 can be configured for **O**ver**P**ressure **S**hut**O**ff (OPSO), **U**nder**P**ressure **S**hut**O**ff (UPSO), **O**verpressure and **U**nder**P**ressure **S**hut**O**ff (OUPSO), manual shutoff, and remote shutoff. In addition, the Type OS2 can utilize an optional limit switches for remote alarm upon shutoff when the valve is tripped.

Mechanism Box (BM1 or BM2)

The mechanism box (BM1 or BM2, see figure 2) is designed to close the slam shut valve. The detection of pressure variances is sensed by a double stage trip mechanism (see figure 4). The first stage is the detection stage and will only trip when the system pressure reaches the set pressure of the manometric sensing device. The second stage is the power stage and once tripped by the first stage, the closing spring causes the valve plug to slam-shut and remains closed until the valve is manually reset. If there are any inlet pressure variances or vibrations subjected to the second stage components, they are not transmitted to the first stage trip mechanism. This unique double-stage trip mechanism virtually eliminates nuisance tripping commonly found in other shutoff devices.

Manometric Sensing Device (BMS1 or BMS2) (See Figure 2)

Pressure from the system is sensed through control lines into the manometric sensing device (BMS1, BMS2, or BMS1 and BMS2). Depending on the configuration, the BMS1 or BMS2 will transmit these pressure fluctuations to the mechanism box. If these fluctuations reach the setpoint of the manometric sensing device (BMS1 or BMS2), the device will activate the tripping mechanism in the mechanism box (BM1 or BM2) and cause the valve to slam shut.

The BM1 can be configured with only the BMS1 to trip on high pressure (OPSO), low pressure (UPSO), or high and low pressure (OUPSPO) (see figure 2). The BM2 can be configured with the BMS1 to trip on high pressure only (OPSO) and the BMS2 to trip on high pressure (OPSO), low pressure (UPSO) and high/low pressure (OUPSO) (see figure 2 and refer to table 1).

Principle of Operation (See Figure 3)

For Type EZR principle of operation, refer to Type EZR Instruction Manual.

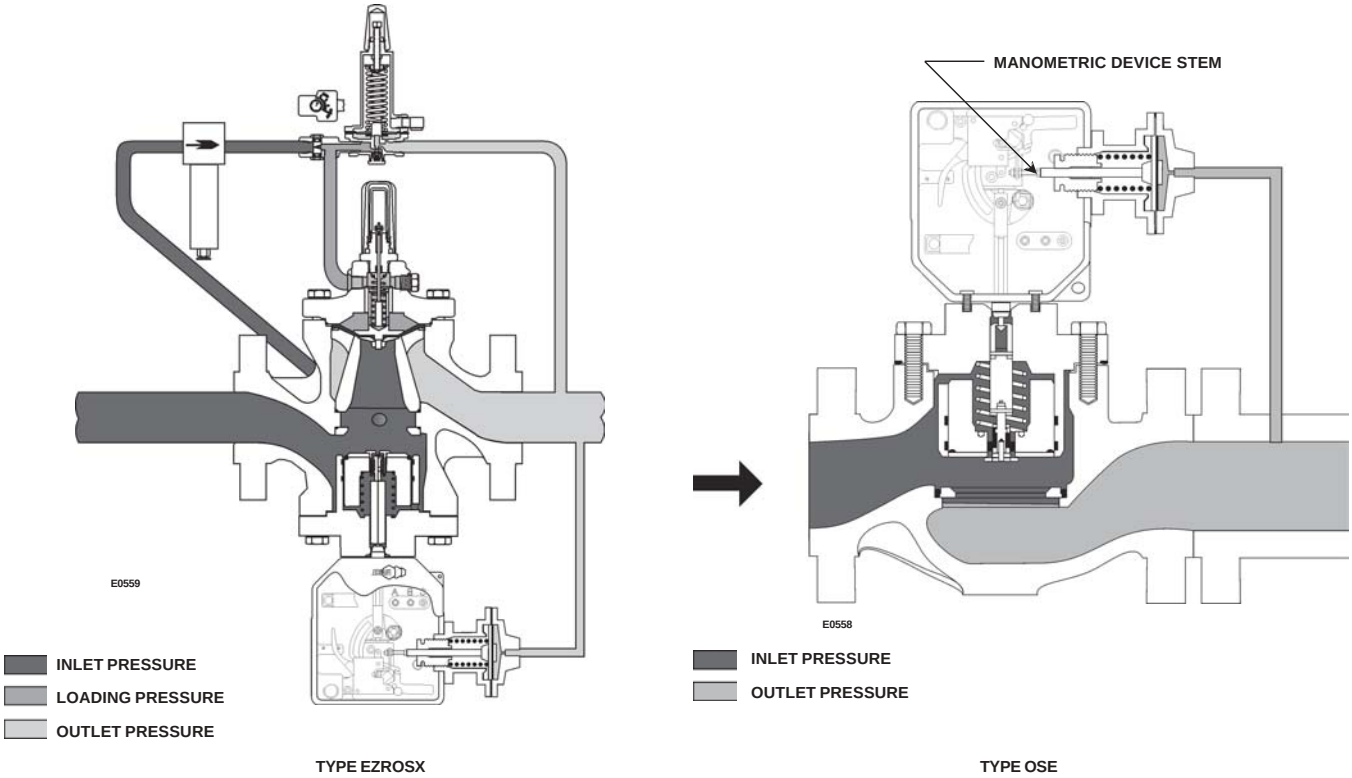

Figure 3. *Operational Schematics*

Table 3. *Main Valve Body Sizes, End Connection Styles, and Body Pressure Ratings*

MAIN VALVE BODY SIZE	MAIN VALVE BODY MATERIAL	END CONNECTION STYLE(1)	STRUCTURAL DESIGN RATING(2)
1-inch (DN 25) 2-inch (DN 50) 3-inch (DN 80) 4-inch (DN 100) 6-inch (DN 150)	Cast iron	NPT screwed (1 and 2-inch only)	400 psig (27,6 bar)
		ANSI Class 125B FF	200 psig (13,8 bar)
		ANSI Class 250B RF	500 psig (34,5 bar)
1-inch (DN 25) 2-inch (DN 50) 3-inch (DN 80) 4-inch (DN 100) 6-inch (DN 150)	WCB Steel	NPT screwed (1 and 2-inch only)	1480 psig (102 bar)
		ANSI Class 150 RF	285 psig (19,6 bar)
		ANSI Class 300 RF	740 psig (51,0 bar)
		ANSI Class 600 RF	1480 psig (102 bar)

1. Ratings and end connections for other than ANSI standard can usually be provided. Contact your Fisher Sales Representative or Sales Office for assistance.
2. See Specifications and table 2 for additional pressure ratings.

The Type OSE slam-shut valve and the Type OS2 slam-shut device used on Type EZROSX provides overpressure and/or underpressure protection by shutting off the flow to the downstream system. The slam-shut valve with external registration requires a sensing line and is installed upstream of a pressure reducing regulator.

Pressure is registered on one side of the diaphragm, piston, or bellows and is opposed by the setpoint control spring of the manometric sensing device. The Type OSE slam-shut valve tripping pressure is determined by the setting of the control spring.

Overpressure: when the downstream pressure increases past the setpoint, the pressure on top of the diaphragm overcomes the spring setting and moves the manometric device stem.

Underpressure: when the downstream pressure decreases below the setpoint, the control spring pressure below the diaphragm overcomes the downstream pressure and pushes the diaphragm which moves the manometric device stem.

When the pressure of the downstream line rises above the set pressure (or drops below the set pressure) the manometric device senses the pressure change and triggers the detection stage which activates the second stage releasing the slam shut valve plug. A tight and total shutoff is ensured by the plug seal O-ring closing on the orifice and is helped by the “dash pot” effect between the bonnet skirt and the valve plug. A “dash pot” effect occurs when the valve plug closes by having both the closing spring and the inlet pressure pushing on top of the valve plug. This is accomplished by ports around the skirt of the bonnet allowing inlet pressure above the valve plug.

Installation

WARNING

Personal injury, equipment damage, or leakage due to escaping gas or bursting of pressure-containing parts may result if the slam-shut valve is installed where its capabilities can be exceeded or where conditions exceed any ratings of the adjacent piping or piping connections. To avoid this, install the slam-shut valve where service conditions are within unit capabilities and applicable codes, regulations, or standards. Additionally, physical damage to the slam-shut valve could break the mechanism box off the main valve, causing personal injury and property damage due to escaping gas. To avoid such injury or damage, install the unit in a safe location.

Installation, operation, and maintenance procedures performed by unqualified personnel may result in improper adjustment and unsafe operation. Either condition may result in equipment damage or personal injury. Use qualified personnel when installing, operating, and maintaining the unit.

For Type EZR installation, refer to Type EZR Instruction Manual.

Clean out all pipelines before installation and check to be sure the valve has not been damaged or collected

foreign material during shipment. Use suitable line gaskets and good bolting practices with a flanged body. The Type OSE must be installed in a horizontal position with the mechanism box above the body (see figure 2). The EZROSX is installed with the mechanism box typically below the pipe. This slam-shut device can also be installed in a pit that is subject to flooding by venting the mechanism box above the maximum possible flood level. When using below ground, the vent must be relocated (piped) to keep the mechanism box from collecting moisture and/or other foreign material. Install obstruction-free tubing or piping into the 1/4-inch NPT vent tapping. Provide protection on the relocated vent by installing a screened vent cap into the end of the vent pipe.

The Type OSE/EZROSX can be used along with a token relief valve to minimize unnecessary shutoff. The relief valve is set to open before the Type OSE/EZROSX slam-shut valve activates. This arrangement allows the relief valve to handle minor overpressure problems such as gas thermal expansion or seat leakage due to dirt moving through the system which may move out of the regulator during the next operating cycle. The slam-shut valve does activate if the regulator has a major malfunction with excessive gas flow that exceeds the token relief capacity.

The manometric device requires an external sensing line which should be tapped into a straight run of pipe 8 to 10 pipe diameters downstream or upstream of the slam-shut device. If impossible to comply with this recommendation due to the pipe arrangement, it may be better to make the sensing line tap nearer the regulator or slam-shut outlet rather than downstream of a block valve. Do not make the tap near any elbow, swage, or nipple which might cause turbulence.

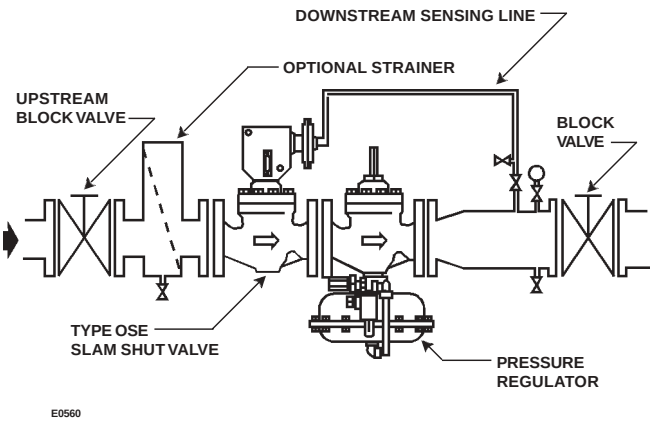

OVERPRESSURE AND UNDERPRESSURE SHUTOFF USING ONE MANOMETRIC DEVICE

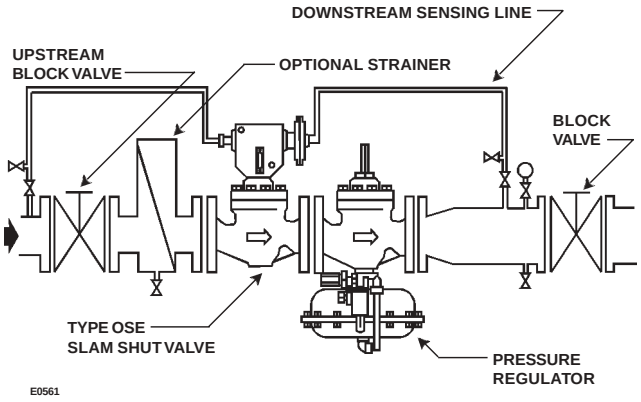

MINIMUM/MAXIMUM UPSTREAM AND DOWNSTREAM PRESSURE

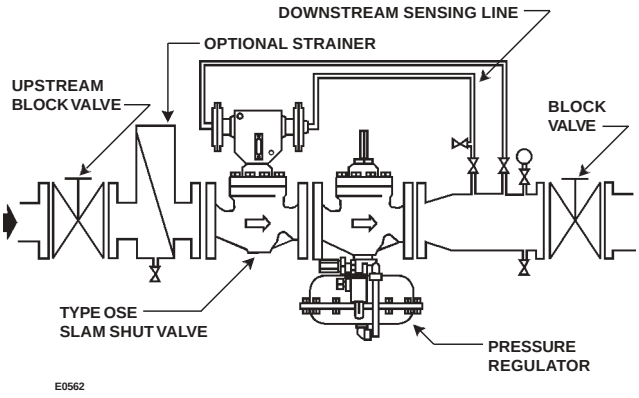

OVERPRESSURE AND UNDERPRESSURE SHUTOFF USING TWO MANOMETRIC DEVICES

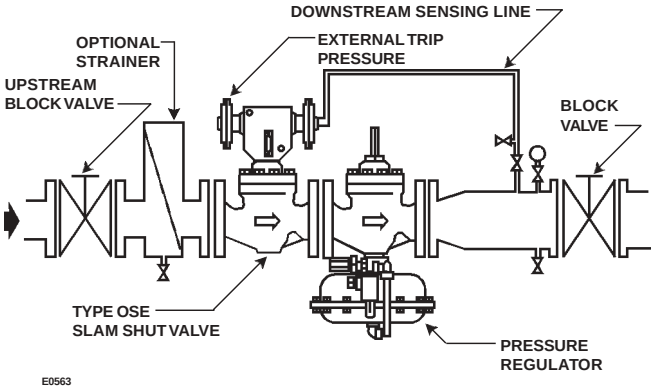

EXTERNAL SIGNAL

Figure 4. *Typical Installations*

Startup

WARNING

To avoid personal injury or property damage due to explosion or damage to regulator or downstream components during startup, release downstream pressure to prevent an overpressure condition on the diaphragm of the regulator. In order to avoid an overpressure condition and possible equipment damage, pressure gauges should always be used to monitor pressures during startup.

These startup procedures are for the Type OSE/OS2 only. For Startup procedures of the Type EZR portion of Type EZROSX refer to Type EZR Instruction Manual.

1. Make sure the downstream shutoff valve is closed.

2. The slam-shut is shipped with the slam-shut device in the tripped position. To reset the slam-shut, follow the procedure under Resetting the Trip Mechanism in the Maintenance section.

3. Slowly open the upstream shutoff valve.

4. Slowly open the downstream shutoff valve.

5. Check all connections for leaks.

6. Adjust the slam-shut pressure setting by following the appropriate procedures in the Adjustment section.

Adjustment

Typically, adjustments are carried out with the slam-shut valve closed. Only the detection stage is reset. (See Maintenance section.) Follow the procedures below for setpoint adjustment and use the resetting tool (key 3, figure 13) to move the adjusting screw.

CAUTION

Before any adjustment, check that the spring range installed corresponds to the required setpoint.

CAUTION

Before beginning adjustment procedures, be sure there is no pressure in the manometric sensing device (BMS1 or BMS2).

BMS1 (Figure 5)

Overpressure Shutoff Only

Adjusting the threaded stem:

1. Remove the tripping hook or move to an inactive position.

2. Reset the detection stage only. (See figure 7 and Resetting the Trip Mechanism in the Maintenance Section.)

3. Adjust the threaded stem to a distance of 1/16-inch (1,59 mm) from the pin D1 (detection stage set).

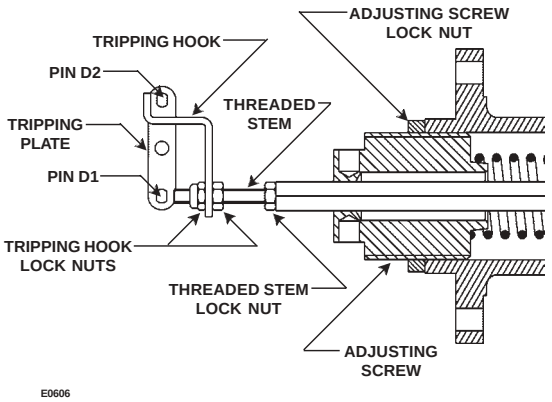

OVERPRESSURE SHUTOFF

Figure 5. *BMS1 Construction*

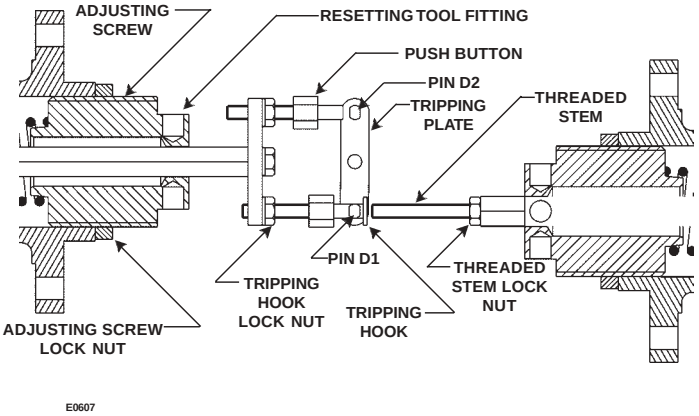

OVERPRESSURE AND UNDERPRESSURE SHUTOFF

Figure 6. *BMS2 Construction*

4. Tighten threaded stem lock nut.

Adjusting the overpressure trip point:

1. Pressurize the BMS1 to desired trip pressure.

2. Screw the adjustment screw until the detection stage can be reset.

3. Unscrew the adjustment screw until the detection stage trips.

4. Check the pressure value at the trip point and adjust if necessary.

5. Tighten adjustment screw lock nut.

Underpressure Shutoff Only:

Adjusting the threaded stem and tripping hook:

1. Move the tripping hook to an inactive position.

2. Reset the detection stage only. (See figure 7 and Resetting the Trip Mechanism in the Maintenance Section.)

3. Relax the control spring by unscrewing the adjustment screw.

4. Pressurize the BMS1 to the desired trip pressure

5. Adjust the threaded stem to a distance of 1/16-inch (1,59 mm) from the pin D1 (detection stage set).

6. Tighten threaded stem lock nut.

7. Put the tripping hook into position and adjust tripping hook lock nuts until the hook is a distance of 1/16-inch (1,59 mm) from pin D2.

8. Tighten tripping hook lock nuts.

Adjusting the underpressure trip point:

1. Maintain the desired trip pressure in BMS1.

2. Unscrew the adjustment screw until detection stage is tripped.

3. Check the pressure value at the trip point and adjust if necessary.

4. Tighten adjustment screw lock nut.

Overpressure and Underpressure Shutoff:

Adjusting the threaded stem:

1. Move the tripping hook to an inactive position.

2. Reset the detection stage only. (See figure 4 and Resetting the Trip Mechanism in the Maintenance Section)

3. Relax the control spring by unscrewing the adjustment screw.

4. Pressurize the BMS1 to the desired overpressure trip point

5. Adjust the threaded stem so it just touches the pin D1.

6. Manually trip the detection stage by moving pin D1 (see figure 5).

7. Unscrew the threaded stem two turns, or to a distance of 1/16-inch (1,59 mm) from the pin D1.

8. Tighten threaded stem lock nut.

Overpressure adjustment:

Same procedure as overpressure shutoff only.

Underpressure adjustment:

1. Pressurize the BMS1 to an average pressure between the overpressure and the underpressure trip points.

2. Reset the detection stage only. (See figure 4 and Resetting the Trip Mechanism in the Maintenance Section)

3. Pressurize the BMS1 to the underpressure trip point.

4. Adjust the hook by progressively moving lock nuts until it trips.

5. Tighten tripping hook lock nuts.

6. Check the pressure value at the trip point and adjust if necessary.

BMS2 (Figure 6)

Overpressure Shutoff Only

Adjusting the overpressure push button:

1. Remove the tripping hook.

2. Reset the detection stage only. (See figure 7 and Resetting the Trip Mechanism in the Maintenance Section)

CAUTION

Be sure there is no pressure in the manometric sensing device before doing the following steps.

3. Compress control spring so that the distance between the push button and the pin D2 no longer increases.

4. Adjust the push button to a distance of 1/16-inch (1,59 mm) from the pin D1.

5. Tighten threaded stem lock nut.

Adjusting the overpressure shutoff only:

Same procedure as adjusting the BMS1 overpressure shutoff only. See page 7.

Underpressure Shutoff Only:

Adjusting the underpressure shutoff only tripping hook:

1. Remove the overpressure push button or screw it tight to inactivate it.

2. Reset the detection stage only. (See figure 7 and Resetting the Trip Mechanism in the Maintenance Section)

3. Tighten threaded stem lock nut.

4. Relax the control spring by unscrewing the adjustment screw.

5. Pressurize the BMS2 to the desired underpressure trip point.

6. Adjust the tripping hook to a distance of 1/16-inch (1,59 mm) from pin D2.

7. Tighten tripping hook lock nut.

Adjusting the underpressure shutoff only:

Same procedure as adjusting the BMS1 underpressure shutoff only. See page 7.

Overpressure and Underpressure Shutoff:

Adjusting the push button:

1. Completely unscrew the tripping hook.

2. Reset the detection stage only. (See figure 7 and Resetting the Trip Mechanism in the Maintenance Section)

3. Relax the control spring by unscrewing the adjustment screw.

4. Pressurize the BMS2 to the overpressure shutoff trip point.

5. Adjust the push button until it just touches the pin D1.

6. Manually trip the detection stage by moving pin D1 (see figure 5).

7. Unscrew the push button two turns or a distance of 1/16-inch (1,59 mm) from the pin D1.

8. Tighten threaded stem lock nut.

Adjusting the overpressure and underpressure trip points:

Overpressure adjustment procedure is the same as adjusting the overpressure shutoff only.

Underpressure adjustment:

1. Pressurize the BMS2 to an average pressure between the overpressure and underpressure trip points.

2. Reset the detection stage only. (See figure 7 and Resetting the Trip Mechanism in the Maintenance Section)

3. Pressurize the BMS2 to the underpressure trip point.

4. Screw in the tripping hook progressively until detection stage trips.

5. Tighten tripping hook lock nut.

6. Check pressure value at the trip point and adjust if necessary.

Shutdown

WARNING

To avoid personal injury or property damage due to explosion or damage to shutoff device, regulator, or downstream components during shutdown, release downstream pressure to prevent an overpressure condition on the regulator diaphragm.

For Type EZR portion of EZROSX shutdown, refer to Type EZR Instruction Manual.

Installation arrangements may vary, but in any installation it is important that the valves be opened or closed slowly. The steps below apply to the typical installation.

1. Slowly close the downstream shutoff valve.

2. Slowly close the upstream shutoff valve.

3. Slowly open vent valves downstream of the slam-shut.

4. Slowly open vent valves upstream of the slam-shut.

Maintenance

Instructions are given for complete disassembly and assembly. Key numbers are references in figure 14 unless otherwise noted.

Resetting the Trip Mechanism

Resetting of the Type OSE/EZROSX Slam-Shut Valve is done manually. After the Type OS2 has closed, it must be manually reset before it can be placed back in service. Before resetting the Type OS2, check for and correct the reason for the overpressure/ underpressure condition. For the following procedures, see figures 7 and 8.

CAUTION

Never use an extension with the reset tool when resetting the second stage.

Note

To reset the detection stage, the pressure in the manometric sensing device must be below the overpressure trip point and/ or above the underpressure trip point. Otherwise the detection stage cannot be reset.

Note

Because the Type OS2 mounted on the Type EZROSX is turned 180°, the following directions apply to the Type OSE only, however, the reset procedure for the Type EZROSX is the same. When a specific direction is given (i.e. top left), the Type EZROSX direction will be reversed (i.e. bottom right).

To reset the Type OS2, close the upstream block valve. Open the front cover of the mechanism box.

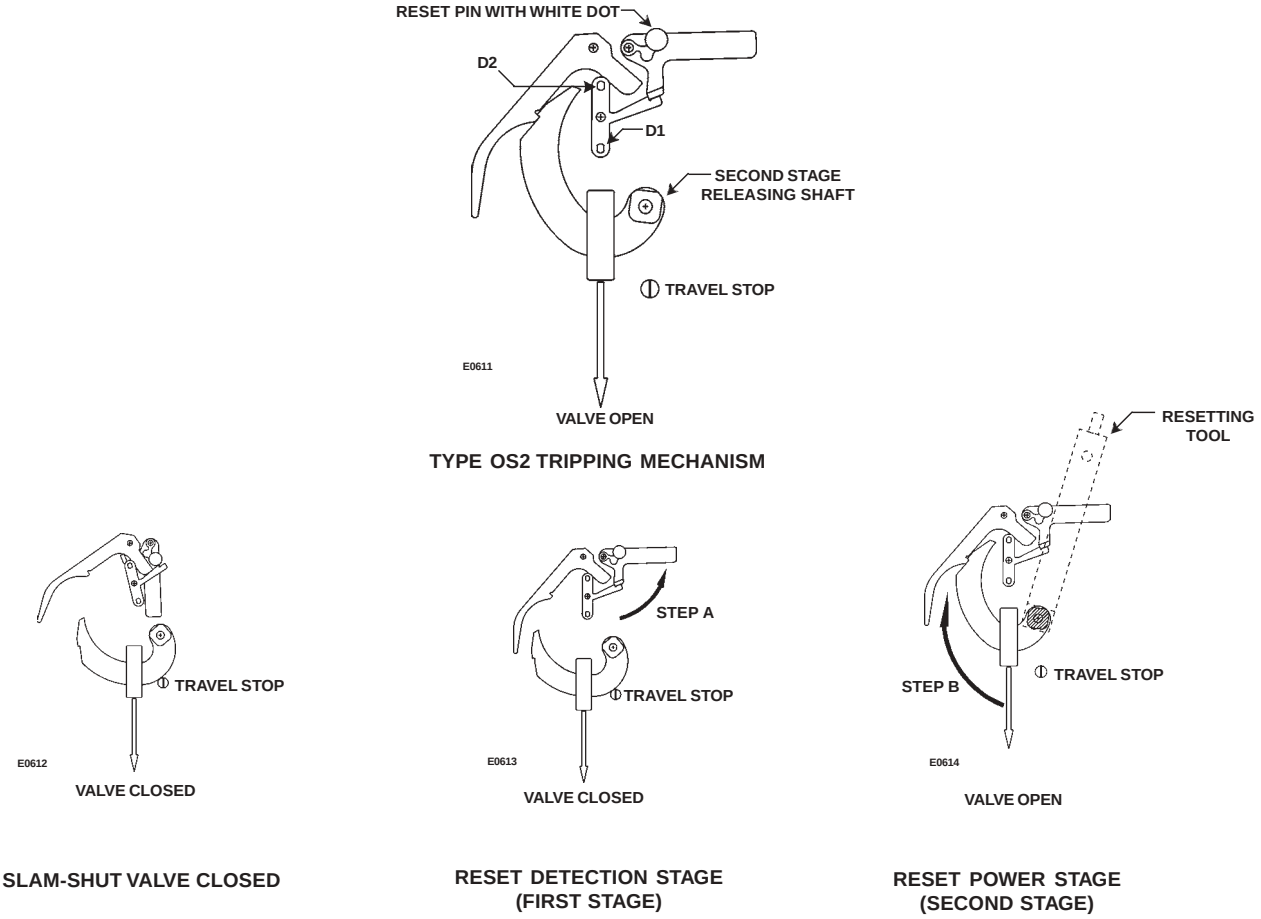

Figure 7. *Mechanism Trip Stages (Orientation for the Type OSE shown. Orientation for the Type EZROSX is rotated 180°.)*

Detection Stage (First Stage)

In the top center location of the box, there is a pin with a white dot on the front. Push this pin up and to the right (Type OSE only, see note on page 10). This action will lock in the detection stage (see step A in figure 7).

Power Stage (Second Stage)

Note

The reset tool is keyed and will only fit on the second stage releasing shaft in one orientation. Be sure the tool securely fits onto the shaft before turning.

To reset the power stage use the square reset tool located in the lower left corner of the mechanism box. Place the square end of the tool on the second stage releasing shaft in the center of the box and slowly rotate clockwise (see step B in figure 7).

When movement is started on the stem, the internal bypass will open and equalize the pressure on each side of the valve plug before the valve plug can be moved off the seat. Continue turning the reset tool, this will raise the valve plug, compress the closing spring and latch the second stage (power stage) mechanism. Replace the reset tool on its holder and replace the cover. Slowly open the upstream block valve.

Mechanism Box (BM1 or BM2)

Disassembly

WARNING

Avoid personal injury or damage to property from sudden release of pressure or uncontrolled gas or other process fluid. Before disassembling, carefully relieve all pressures. Use gauges to monitor inlet and outlet pressures while releasing these pressures.

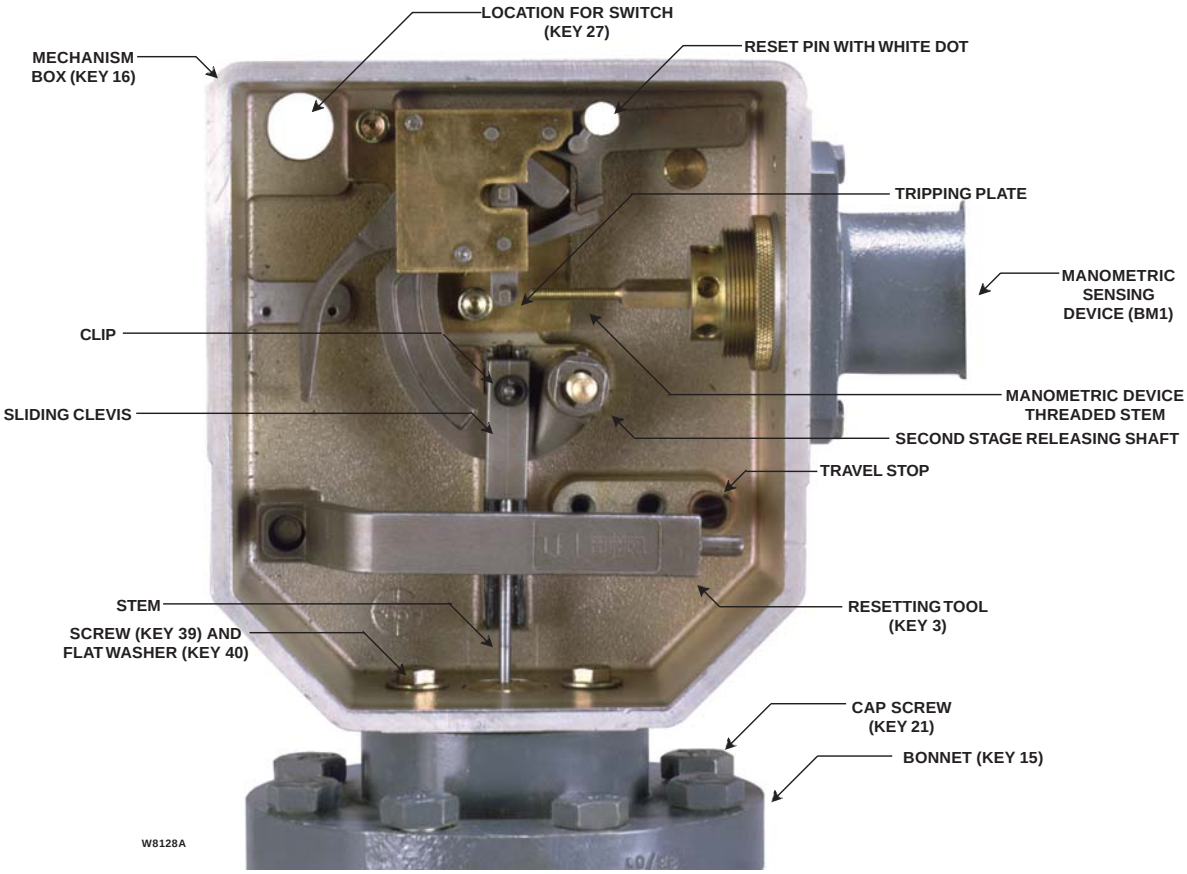

Figure 8. *Internal Parts*

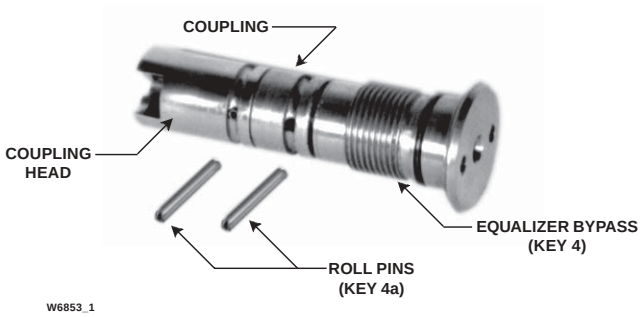

Figure 9. Equalizer Bypass and Coupling Assembly

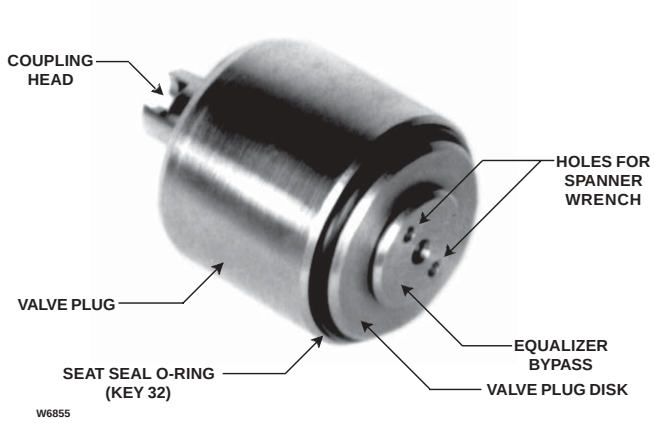

Figure 10. Valve Plug and Equalizer Bypass Assembly

Note

The only parts that are replaceable on the Type OS2 are the equalizer bypass component, manometric sensing device (BMS1 and BMS2), and the sealing components. The seat ring on the Type OSE is pressed into the body and is not field removable.

Note

The position of the travel stop (figures 7 and 11) depends on the type of assembly and its size. The travel stop must be in the B position for 1 and 2-inch body sizes. For all other body sizes, the travel stop must be in the C position.

The cover is held on by one screw which can be unscrewed manually or by using a socket (maximum recommended torque is 1.8 foot-pounds (2,5 N•m).)

1. Open the mechanism cover and replace the cover screw O-ring by removing the circlip.

CAUTION

Trip the mechanism if it is not already released by moving the pin D1 (see figure 7), to remove as much spring tension on the stem as possible.

2. Trip the mechanism by carefully turning the tripping plate (pins D1 and D2) located by the manometric device stem clockwise (refer to figures 5 and 6).

3. Remove the clip (refer to figure 7). Pull the pin from the sliding clevis releasing the clevis so it can be turned and detached from the stem.

4. Remove the two cap screws (key 39) holding the mechanism box (key 16) to the bonnet and remove the mechanism box (refer to figure 7).

5. Remove the nuts or cap screws (key 21) holding the bonnet to the body.

6. The bonnet (key 15), valve plug (with equalizer bypass, key 5), main spring (key 12), and small stem bushing (key 24) will lift out of the body as a unit. Set the unit on a hard flat surface on the valve plug and press down on the bonnet to compress the main spring allowing the stem to be unhooked from the coupling head.

7. Use a spanner wrench (a wrench is supplied with one of the replacement parts kits) to unscrew the equalizer bypass from the valve plug (refer to figures 8, 9, and 10). The 1-inch body size equalizer bypass holds the seat seal O-ring to the valve plug. On the 2-inch and 3-inch sizes the equalizer bypass holds the plug disk and the seat seal O-ring to the valve plug. The 4 and 6-inch sizes valve plug disk and valve plug are held together by six cap screws. On these sizes remove the cap screws and valve plug disk to replace the seat seal O-ring (refer to figure 9).

Note

The equalizer bypass is a common part between all valve plug sizes. The equalizer bypass is not serviceable and must be replaced as a unit.

8. To remove the equalizer bypass from the coupling and coupling head, drive out the roll pin on the coupling (refer to figure 8).

Assembly

1. Attach a new equalizer bypass (key 4) to the coupling using a roll pin (key 4a, refer to figure 8).

2. Screw the equalizer bypass into the valve plug with the plug disk and a new seat seal O-ring (key 32, figure 9). Be careful not to nick or pinch the O-ring when tightening the equalizer bypass. On the 4 and 6-inch body sizes attach the plug disk and a new seat seal O-ring to the valve plug using six cap screws (refer to figures 10 and 14).

3. Replace the valve plug guides (key 7, figure 14) on the inside of the skirt of the bonnet.

4. Place a new O-ring (key 2, figure 15) on the small stem bushing (key 24, figure 15). Set the valve plug assembly on a hard flat surface. Set the main spring in place on the valve plug. Place the bonnet on the spring and compress the spring by pressing down on the bonnet. Attach the stem to the coupling head of the valve plug through the bonnet. Slowly release the bonnet allowing spring tension to seat the small stem bushing in the bonnet, be careful to properly seat the O-ring (key 2).

5. Place the bonnet assembly into the body using a new gasket (key 10, figure 14) and a new O-ring (key 11, figure 13). Secure the bonnet by tightening down the nuts or cap screws.

6. Place the mechanism box onto the bonnet and attach using two cap screws (key 39) and two flat washers (key 40).

7. Hook the sliding clevis to the stem and insert the pin (refer to figure 8). Secure the pin using the clip.

8. To reset see Resetting the Trip Mechanism in the Maintenance section.

Manometric Sensing Device (BMS1 or BMS2)

The BMS1 is the first manometric sensing device. The BMS2 is the second manometric sensing device.

Disassembly

1. Disconnect the pressure sensing line from the manometric device (BMS).

2. If applicable, remove the BMS tripping hook from the adjustable stem of the BMS (see figures 6 and 7).

3. Loosen and remove the hex head cap screws (key 38a) and O-ring (key 38b) at the mechanism box/ manometric device joint. (See figure 11)

4. Carefully pull the BMS away from the mechanism box (BM) followed by a rubber joint gasket (key 38c, figure 11).

5. Inspect the rubber joint gasket (key 38c) for deterioration or damage and replace if necessary.

6. Loosen the adjustment lock nut on the adjusting screw and then unscrew and then remove the adjusting screw.

7. Remove the BMS spring (key 28) in the spring case.

For BMS Type 162 and 71 (Diaphragm, key 9) (See Figure 10):

8. Loosen the cap screws and nuts on the casing and remove the pressure sensing casing to reach the diaphragm assembly (key 9).

9. If diaphragm replacement is desired, loosen the hex nut which holds the diaphragm assembly at the valve stem.

For BMS Type 236 and 315 (Bellows, key 9) (See Figure 10):

8. Loosen the socket screws at the pressure sensing casing.

9. Remove the spring case from the pressure sensing casing and then remove the bellows.

For BMS Type 27 and 17 (Piston, key 9) (See Figure 10):

8. Loosen the socket screws on the pressure sensing casing and remove the pressure sensing casing.

9. Loosen the socket screws on the spring case and remove the spring case away from the pressure sensing casing.

10. Slide the piston out of the pressure sensing casing.

Assembly

Proceed in the reverse order of disassembly.

Parts Ordering

When corresponding with your Fisher Sales Office or Sales Representative about this equipment, always reference the equipment serial number or FS number. When ordering replacement parts, also be sure to include the complete 11-character part number from the following parts list.

For Type EZR parts ordering, refer to Type EZR Instruction Manual.

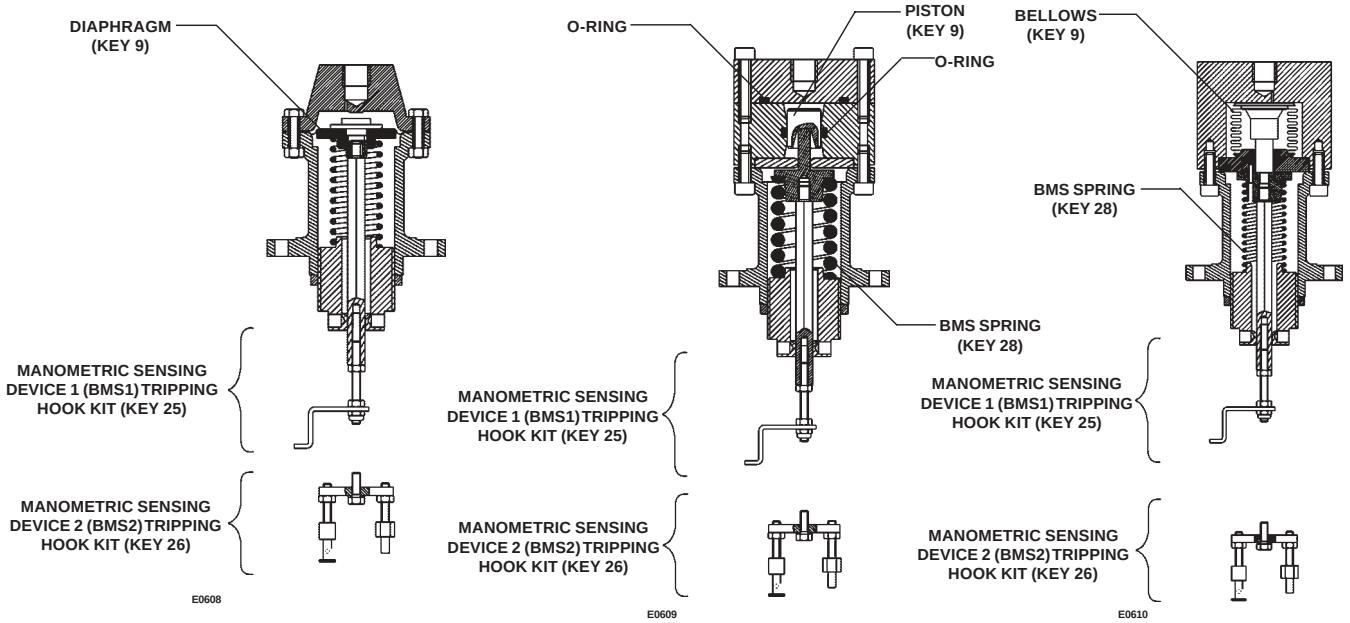

DIAPHRAGM, TYPES 162 AND 71 **PISTON, TYPES 27 AND 17** **BELLOWS, TYPES 236 AND 315**

Figure 11. *Manometric Sensing Device Types*

Parts List

Key	Description	Part Number
	Parts kit, includes keys 5, 7, 10 and 11	
	1-inch (DN 25)	FA197123X12
	2-inch (DN 50)	FA197130X12
	3-inch (DN 80)	FA197132X12
	4-inch (DN 100)	FA197134X12
	6-inch (DN 150)	FA197136X12
	Parts kit, includes all the above plus key 4, and a spanner wrench	
	1-inch (DN 25)	FA197124X12
	2-inch (DN 50)	FA197131X12
	3-inch (DN 80)	FA197133X12
	4-inch (DN 100)	FA197135X12
	6-inch (DN 150)	FA197137X12
	Replacement Kit for BMS Cap Screw, 2 included	FA402018T12
1	Valve Body Assembly	
	Type OSE (E-Body)	
	Steel body	
	1-inch (DN 25)	
	NPT	T80543T0072
	ANSI Class 150 RF	T80543T0012
	ANSI Class 300 RF	T80543T0022
	ANSI Class 600 RF	T80543T0032
	2-inch (DN 50)	
	NPT	T80544T0072
	ANSI Class 150 RF	T80544T0012
	ANSI Class 300 RF	T80544T0022
	ANSI Class 600 RF	T80544T0032
	3-inch (DN 80)	
	ANSI Class 150 RF	T80545T0012
	ANSI Class 300 RF	T80545T0022
	ANSI Class 600 RF	T80545T0032

Key	Description	Part Number
1	Valve Body Assembly (continued)	
	Type OSE (E-Body) (continued)	
	Steel Body (continued)	
	4-inch (DN 100)	
	ANSI Class 150 RF	T80546T0012
	ANSI Class 300 RF	T80546T0022
	ANSI Class 600 RF	T80546T0032
	6-inch (DN 150)	
	ANSI Class 150 RF	T80547T0012
	ANSI Class 300 RF	T80547T0022
	ANSI Class 600 RF	T80547T0032
	Cast iron body	
	1-inch (DN 25)	
	NPT	T80543T0042
	ANSI Class 125 FF	T80543T0052
	ANSI Class 250 RF	T80543T0062
	2-inch (DN 50)	
	NPT	T80544T0042
	ANSI Class 125 FF	T80544T0052
	ANSI Class 250 RF	T80544T0062
	3-inch (DN 80)	
	ANSI Class 125 FF	T80545T0052
	ANSI Class 250 RF	T80545T0062
	4-inch (DN 100)	
	ANSI Class 125 FF	T80546T0052
	ANSI Class 250 RF	T80546T0062
	6-inch (DN 150)	
	ANSI Class 125 FF	T80547T0052
	ANSI Class 250 RF	T80547T0062
	Type EZROSX (X-Body)	
	Steel body	
	1-inch (DN 25)	
	ANSI Class 150 RF	T80548T0012
	ANSI Class 300 RF	T80548T0022
	ANSI Class 600 RF	T80548T0032

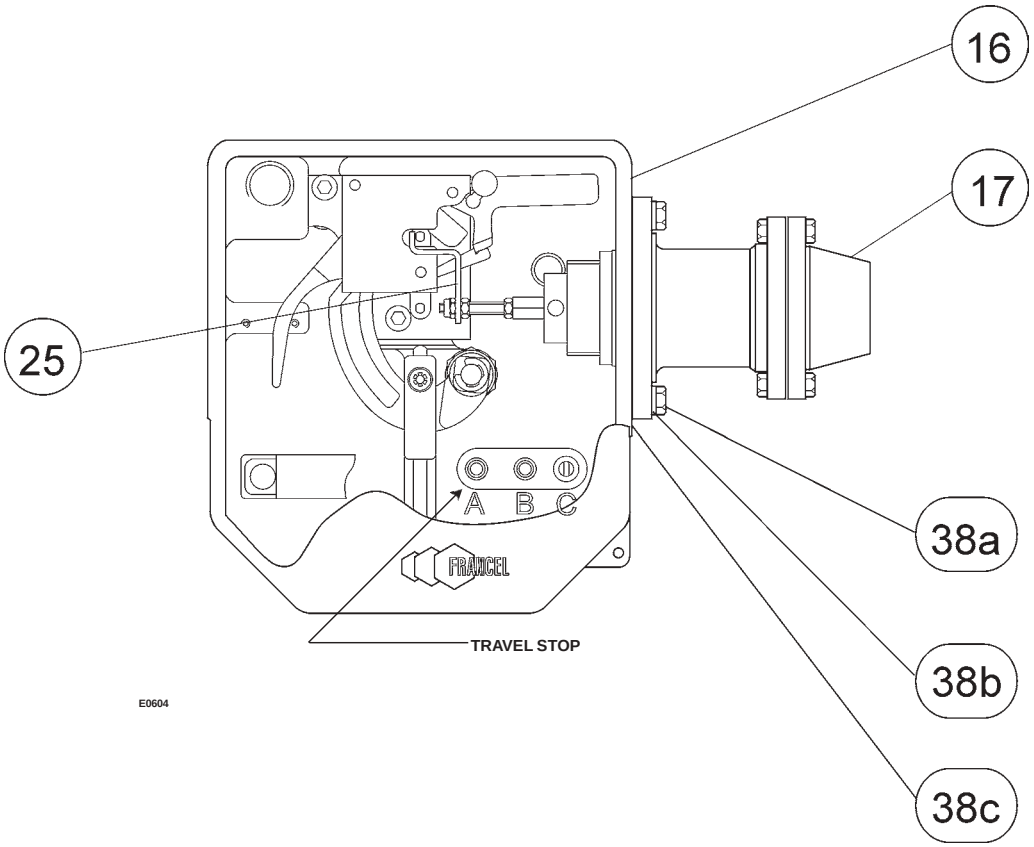

Figure 12. *Mechanism Box (BM1) with 1 Manometric Sensing Device (BMS1)*

Key	Description	Part Number
	Type EZROSX (X-Body) (continued)	
	Steel body (continued)	
	2-inch (DN 50)	
	ANSI Class 150 RF	T80549T0012
	ANSI Class 300 RF	T80549T0022
	ANSI Class 600 RF	T80549T0032
	3-inch (DN 80)	
	ANSI Class 150 RF	T80550T0012
	ANSI Class 300 RF	T80550T0022
	ANSI Class 600 RF	T80550T0032
	4-inch (DN 100)	
	ANSI Class 150 RF	T80551T0012
	ANSI Class 300 RF	T80551T0022
	ANSI Class 600 RF	T80551T0032
	6-inch (DN 150)	
	ANSI Class 150 RF	T80552T0012
	ANSI Class 300 RF	T80552T0022
	ANSI Class 600 RF	T80552T0032
2	O-Ring, Nitrile	FA400514X12
3	Resetting Tool	FA242915T12
4	Bypass Valve	FA180977T12
4a	Roll Pin (2 required)	FA405635T12

Key	Description	Part Number
5	Plug and Bypass Assembly	
	1-inch (DN 25)	FA181114T12
	2-inch (DN 50)	FA181115T12
	3-inch (DN 80)	FA181116T12
	4-inch (DN 100)	FA181117T12
	6-inch (DN150)	FA181118T12
7	Valve Plug Guide	
	1-inch (DN 25)	FA401950T12
	2-inch (DN 50)	FA401951T12
	3-inch (DN 80)	FA401952T12
	4-inch (DN 100)	FA401953T12
	6-inch (DN150)	FA401954T12
9	Manometric Sensing Device, Diaphragm, Bellows, or Piston	
	Diaphragm	
	Type 162	FA117563T12
	Type 71	FA142549T12
	Bellows	
	Type 236	FA127734T12
	Type 315	FA134507T12
	Piston	
	Type 27 or 17	FA197352T12

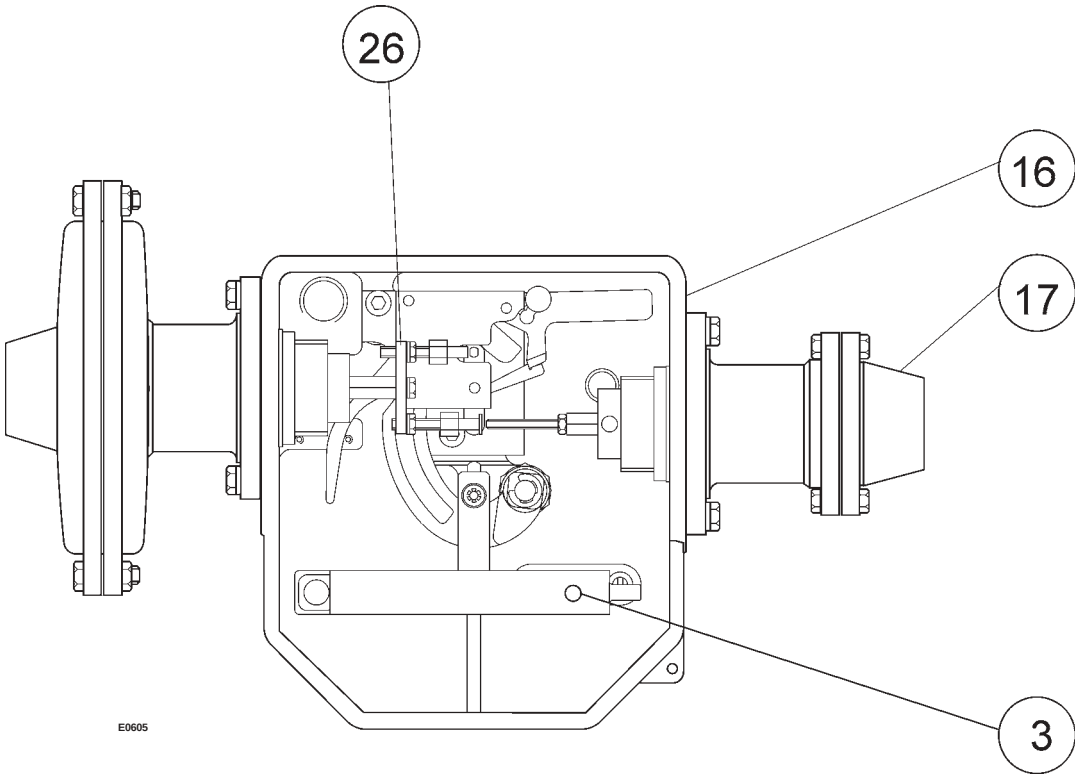

Figure 13. *Mechanism Box (BM2) with 2 Manometric Sensing Devices (BMS2)*

Key	Description	Part Number
10	Gasket, Bonnet	
	1-inch (DN 25)	14A6785X012
	2-inch (DN 50)	14A5685X012
	3-inch (DN 80)	14A5665X012
	4-inch (DN 100)	14A5650X012
	6-inch (DN150)	14A6984X012
11	O-Ring, External, Bonnet	
	1-inch (DN 25)	FA400009T12
	2-inch (DN 50)	FA400024T12
	3-inch (DN 80)	FA400259T12
	4-inch (DN 100)	FA400045T12
	6-inch (DN150)	FA400262T12
12	Main Spring	
	Type OSE (E-Body)	
	1-inch (DN 25)	T14241T0012
	2-inch (DN 50)	T14242T0012
	3-inch (DN 80)	T14243T0012
	4-inch (DN 100)	T14244T0012
	6-inch (DN150)	T14244T0012

Key	Description	Part Number
12	Main Spring (continued)	
	Type EZROSX (X-Body)	
	1-inch (DN 25)	T14241T0012
	2-inch (DN 50)	T14242T0012
	3-inch (DN 80)	T14244T0012
	4-inch (DN 100)	T14268T0012
	6-inch (DN150)	T14269T0012
15	Bonnet	
	1-inch (DN 25)	FA142209T12
	2-inch (DN 50)	FA142214T12
	3-inch (DN 80)	FA142220T12
	4-inch (DN 100)	FA142226T12
	6-inch (DN150)	FA142232T12
16	Mechanism Box (BM)	
	BM1	FA181067T12
	BM2	FA181068T12
17	Manometric Device	
	Diaphragm	
	Type 162	FA181105T12
	Type 71	FA181106T12

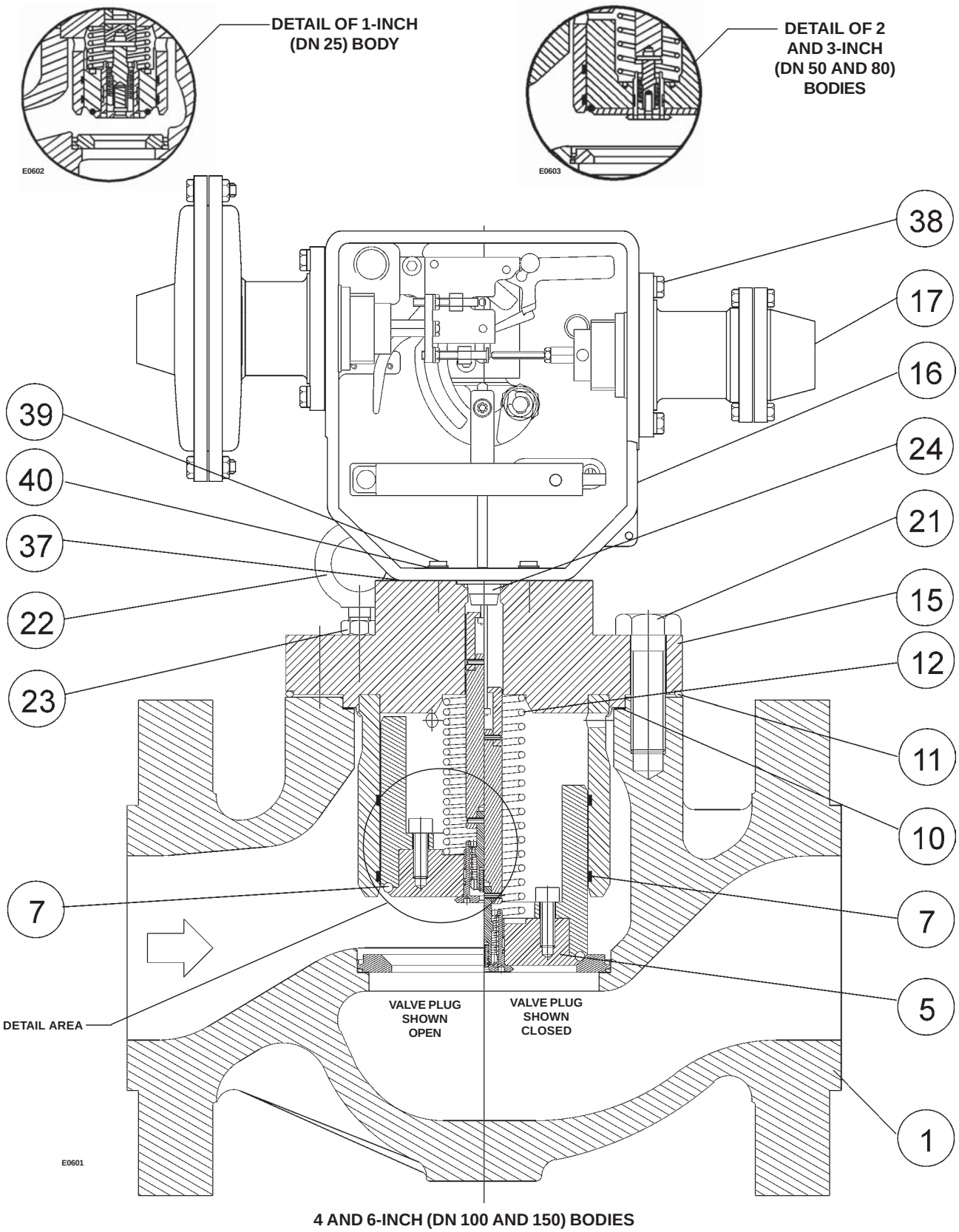

Figure 14. *Type OSE Slam-Shut Valve Assembly*

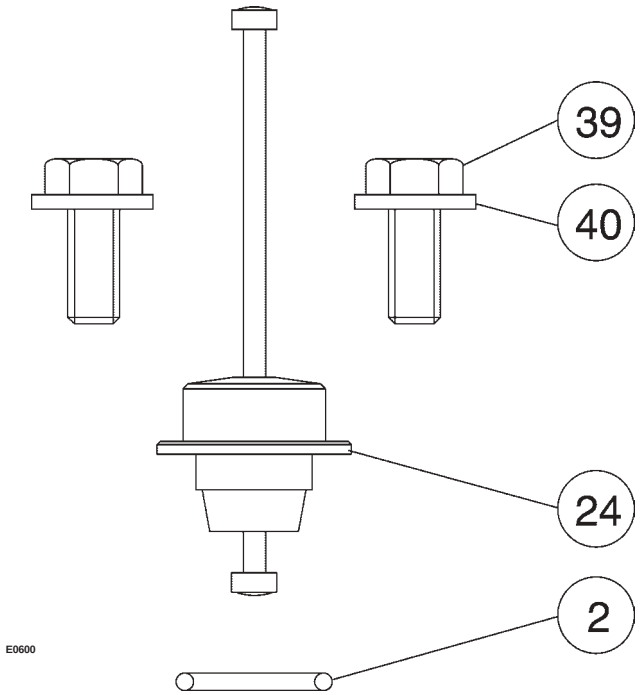

Figure 15. *Small Stem Bushing Detail*

Key	Description	Part Number
17	Manometric Device (continued)	
	Piston	
	Type 27	FA181107T12
	Type 17	FA181108T12
	Bellows	
	Type 236	FA181109T12
	Type 315	FA181110T12
18	Flow Arrow (not shown)	1V106038982
19	Drive Screw (2 required) (not shown)	1A368228982
21	Cap Screw	
	1-inch (DN 25) (4 required)	1R281124052
	2-inch (DN 50) (8 required)	1A453324052
	3-inch (DN 80) (8 required)	1A454124052
	4-inch (DN 100) (8 required)	1A440224052
	6-inch (DN 150) (12 required)	1U513124052
22	Eyebolt (2 required)	
	4 and 6-inch (DN 100 and 150) only	FA403250T12
23	Nut (2 required)	
	4 and 6-inch (DN 100 and 150) only	FA404154T12
24	Bushing, small stem	FA181104T12
25	BMS1 Bracket Kit	FA181111T12
26	BMS2 Bracket Kit	FA181112T12

Key	Description	Part Number
27	Trigger Switch, optional	FA181113T12
28	BMS Control Spring, see table 1	
	Purple	T14232T0012
	Orange	T14233T0012
	Red	T14234T0012
	Yellow	T14235T0012
	Green	T14236T0012
	Blue	T14237T0012
	Gray	T14238T0012
	Brown	T14239T0012
	Black	T14240T0012
29	Drive Screw (2 required) (not shown)	1A368228982
32	Plug O-Ring	
	1-inch (DN 25)	FA400257T12
	2-inch (DN 50)	FA400263T12
	3-inch (DN 80)	FA400258T12
	4-inch (DN 100)	FA400260T12
	6-inch (DN150)	FA400261T12
37	Bonnet/BM Gasket	FA142930T12
38a	Hex Head Cap Screw (2 required)	FA402018T12
38b	O-Ring Washer (2 required)	FA461150T12
38c	Joint Gasket	FA142931T12
39	Screw	FA402028T12
40	Flat Washer	FA405005T12

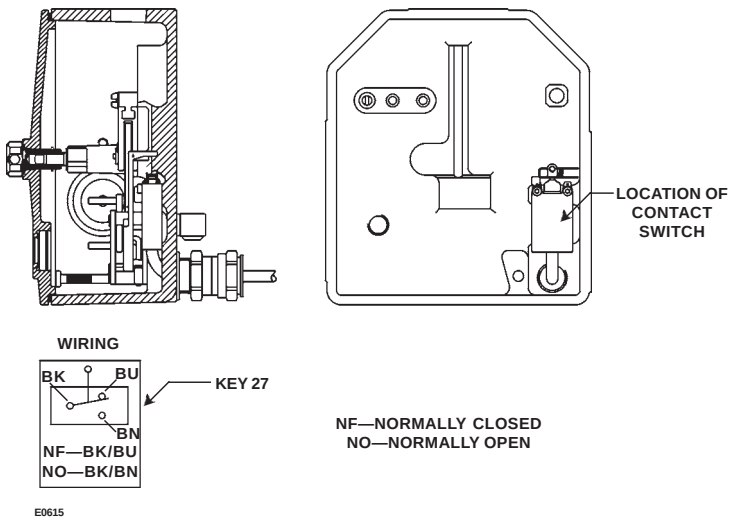

C1 CONTACT VERSION—EXPLOSION PROOF CONNECTION WITH CABLE AND TIGHT-SHUT PACKING GLAND

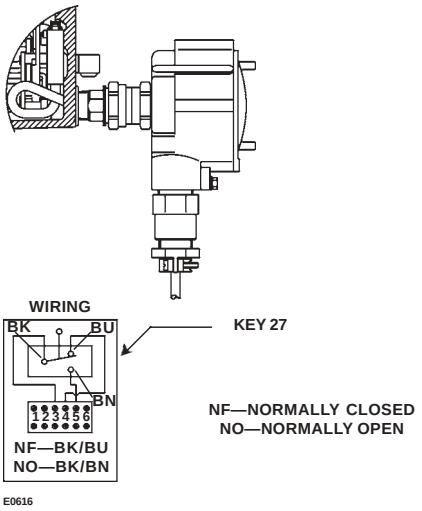

C2 CONTACT VERSION—EXPLOSION PROOF CONNECTION WITH EXPLOSION PROOF CONNECTOR BOX

	AC	DC
Maximum Current	7.0A	0.8A
Maximum Voltage	400V	250V
Protection	EEx-d IIC T6	
Tightness	IP 66	
Temperature	-20° to 160°F (-29° to 71°C)	
Fastening	2 M3 screws	
Cable	3 wires (black, blue, brown) H05VVF (0.118 x 0.3-inch^2 [3 x 0,75 mm^2]) D (0.256-inch [6,5 mm])	

OPTIONS

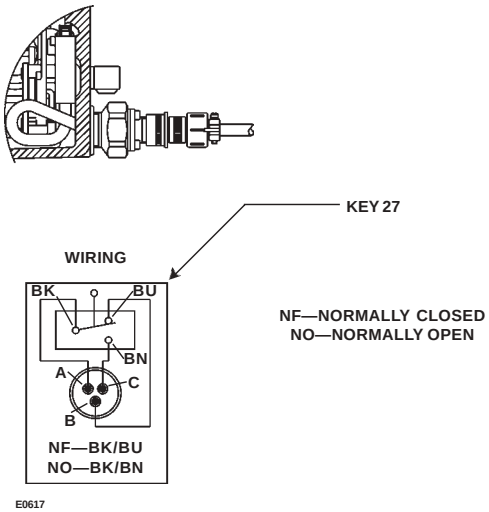

C3 CONTACT VERSION—EXPLOSION PROOF CONNECTION WITH TIGHT-SHUT CONNECTOR FOR INTRINSICALLY SAFE

CONTACT VERSIONS	INSTALLMENT	TIGHTNESS	CONNECTION	MECHANICAL CONNECTIONS	ELECTRICAL CONNECTIONS			
					Commun	NF	NO	Connection
C0		IP 68	Without	Cap 1/2 NPT				
C1	Explosion proof	IP 68	Explosion proof	3 m wire	Black	Blue	Brown	Wires
C2	Explosion proof	IP 65	Explosion proof	Connector box explosion proof/PE explosion proof	3	4	5	Screwed wiring
C3	Intrinsically safe	IP 68	Explosion proof	Intrinsically safe tight-shut connector	A	B	C	Welded wiring

VERSIONS OF EXPLOSION PROOF LIMIT SWITCHES

Figure 16. *Optional Contact Limit Switches*

©Fisher Controls International, Inc., 2001; All Rights Reserved

Fisher and Fisher Regulators are marks owned by Fisher Controls International, Inc. The Emerson logo is a trade mark and service mark of Emerson Electric Co.
All other marks are the property of their respective owners.

The contents of this publication are presented for informational purposes only, and while every effort has been made to ensure their accuracy, they are not to be construed as warranties or guarantees, express or implied, regarding the products or services described herein or their use or applicability. We reserve the right to modify or improve the designs or specifications of such products at any time without notice.

For information, contact Fisher Controls:
Marshalltown, Iowa 50158 USA
28320 Gallardon, France
Sao Paulo 05424 Brazil
Singapore 128461

Printed in U.S.A.

www.FISHERregulators.com

FISHER®
Regulators